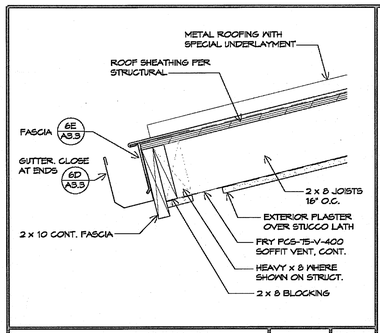

Typical Eave | SCALE: 1 1/2"=1'-0" | 7

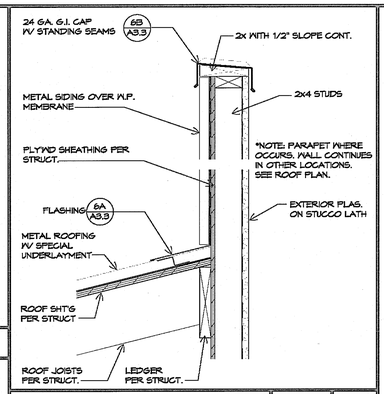

Parapet and Roof | SCALE: 1 1/2"=1'-0" | 2

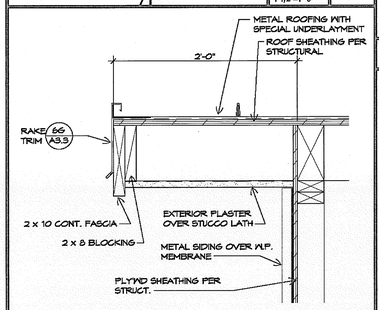

Typical Rake | SCALE: 1 1/2"=1'-0" | 8

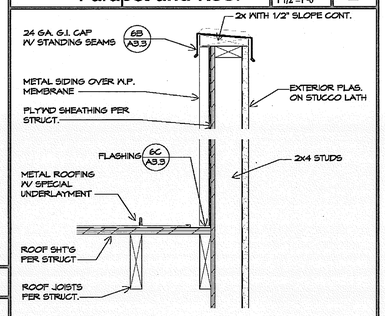

Parapet and Roof | SCALE: 1 1/2"=1'-0" | 3

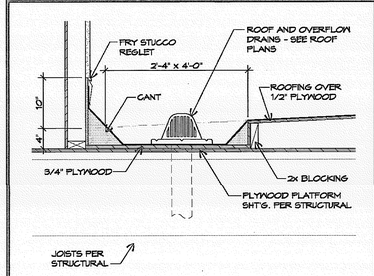

Roof Drain | SCALE: 1"=1'-0" | 9

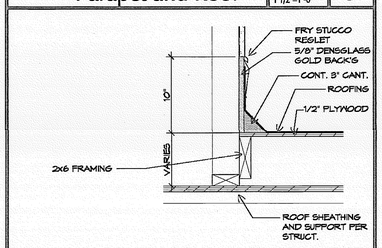

Base at Roof Well | SCALE: 1 1/2"=1'-0" | 4

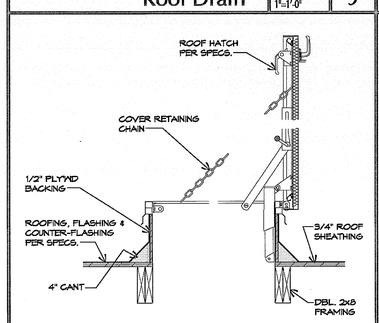

Roof Access Hatch | SCALE: 1"=1'-0" | 10

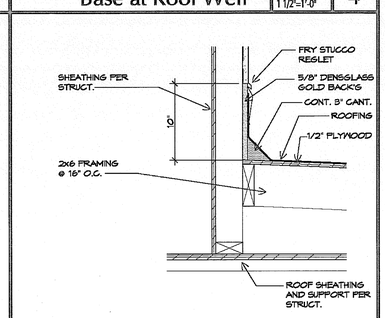

Base at Roof Well | SCALE: 1 1/2"=1'-0" | 5

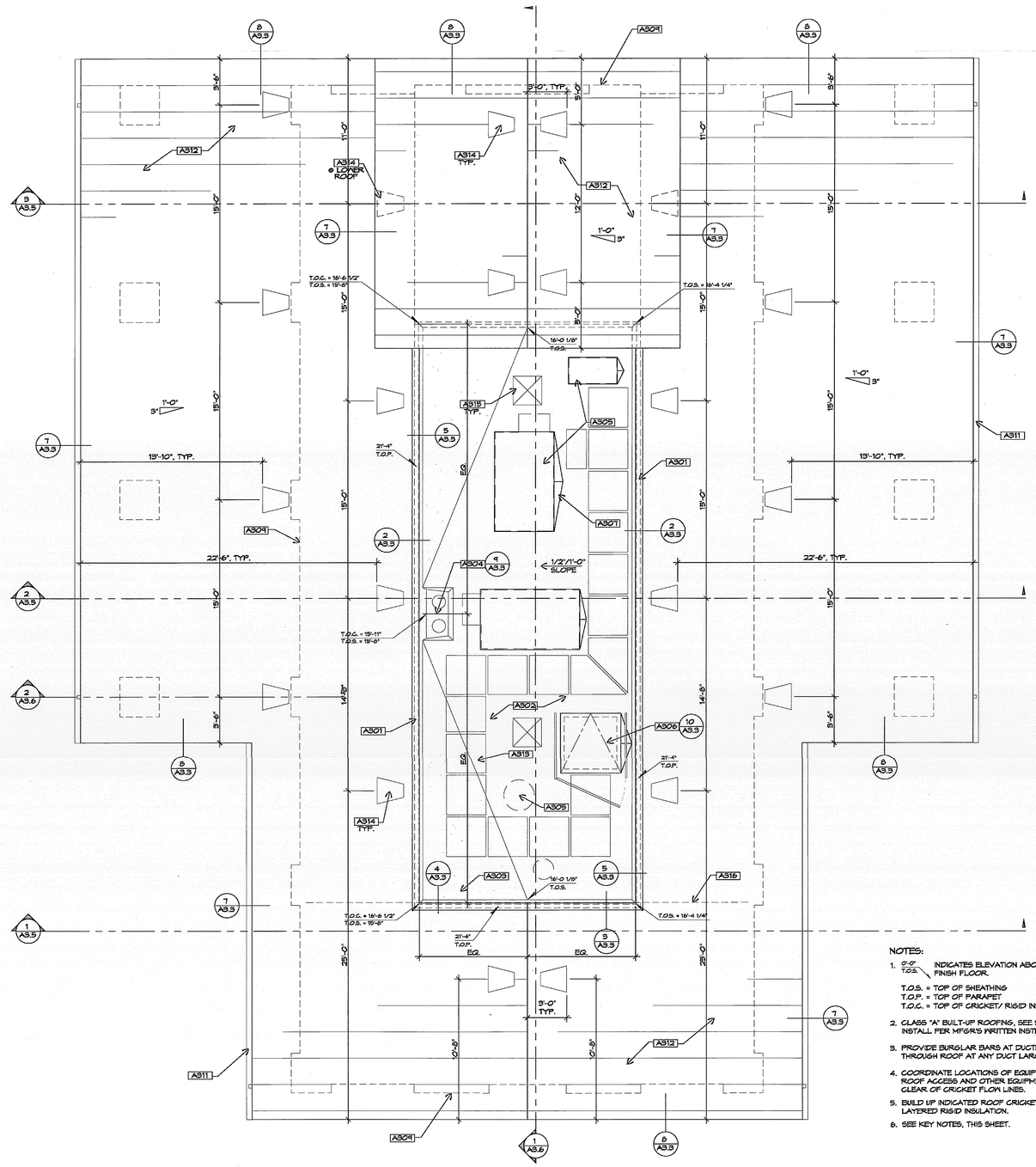

NOTES:

1. 0'-0" T.O.S. INDICATES ELEVATION ABOVE FINISH FLOOR.
   T.O.S. = TOP OF SHEATHING
   T.O.P. = TOP OF PARAPET
   T.O.C. = TOP OF CRICKET/ RIGID INSULATION
2. CLASS "A" BUILT-UP ROOFING, SEE SPECS. INSTALL PER MFGR'S WRITTEN INSTRUCTIONS.
3. PROVIDE BURGLAR BARS AT DUCTWORK THROUGH ROOF AT ANY DUCT LARGER THAN 12"
4. COORDINATE LOCATIONS OF EQUIPMENT PLATFORMS, ROOF ACCESS AND OTHER EQUIPMENT. KEEP EQUIP. CLEAR OF CRICKET FLOW LINES.
5. BUILD UP INDICATED ROOF CRICKETS USING LAYERED RIGID INSULATION.
6. SEE KEY NOTES, THIS SHEET.

Administration Building - Roof Plan | SCALE: 1/4"=1'-0" | 1

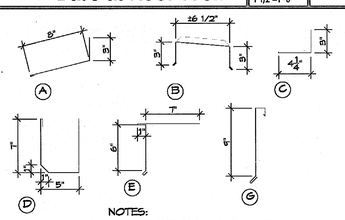

NOTES:

1. ALL FLASHINGS, EXCEPT METAL ROOF FLASHINGS, SHALL BE 24 GA. G.I. PAINTED. DETAILS ONLY SHOW MAIN COMPONENTS FOR CLARIFICATION.
2. METAL ROOF FLASHINGS SHALL BE SAME MATERIAL AND COLOR OF METAL ROOF.
3. PROVIDE COMPLETE SHOP DRAWINGS FOR REVIEW AND APPROVAL.
4. FIELD VERIFY ALL DIMENSIONS IN FIELD PRIOR TO FABRICATION.

Flashings | SCALE: 1 1/2"=1'-0" | 6

A301	SHEET METAL COPING. SEE DETAILS.
A302	BUILT-UP ROOFING.
A303	CRICKET: 1/2" / 1'-0" SLOPE MIN.
A304	ROOF DRAIN & OVERFLOW DRAIN. SEE DETAILS.
A305	ROOF-MOUNTED EQUIPMENT. SEE MECHANICAL DRAWINGS.
A306	ROOF ACCESS HATCH W/ BIL-GUARD RAILING. SEE SPECS.
A307	CRICKET AT UPHILL SIDE OF ALL ROOF EQUIPMENT.
A308	NOT USED.
A309	LINE OF WALL BELOW.
A310	NOT USED.
A311	ROOF GUTTER AND DOWNSPOUTS. SEE EXT. ELEVATIONS.
A312	STANDING SEAM METAL ROOF. 17" WIDE SNAP SEAM HP PANELS IN "COOL FOREST GREEN." SEE SPECS.
A313	PROTECTIVE MATS. ARRANGE AS INDICATED TO PROVIDE WALKWAY FROM ROOF ACCESS TO EQUIP.
A314	12" x 24" 26 GA. GALVANIZED STEEL HALF-ROUND DORMER VENT BY CONSTRUCTION METALS, INC. PAINT TO MATCH ROOF.
A315	18" x 18" 26 GA. GALVANIZED STEEL "ECONO VENT" BY CONSTRUCTION METALS, INC.
A316	5/8" TYPE "X" GYP. BD. DRAFT STOP BELOW. SEE SECTION 1/A-3/6

Roof Key Notes

MIG
MOORE IACOFANO GOLTSMAN, INC.
601 N. HARBOR BLVD.
FULLERTON, CA 92831
TEL 714/871-3533
FAX 714/871-1169
www.migcom.com

PITASSI ARCHITECTS, INC.
8439 White Oak Ave., Suite. 105
Rancho Cucamonga, Ca 91730
Tel. 909-980-1361 ▪ Fax. 909-944-5814
e-mail. pjpaia@pitassiarchitects.com

CONSULTANT:

PERRIS VALLEY Big League Dreams

2155 Trumble Road
Perris, California 92570

SHEET TITLE

100% CONSTRUCTION DOCUMENT

DATE	REVISIONS

STAMP

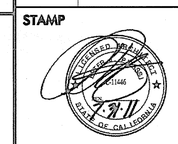

CHECKED BY	DATE
-	-
DATE 01-07-10	FILE NAME
DRAWN BY -	SHEET A-3.3
JOB NO. 05208.00	
SCALE	OF SHEETS