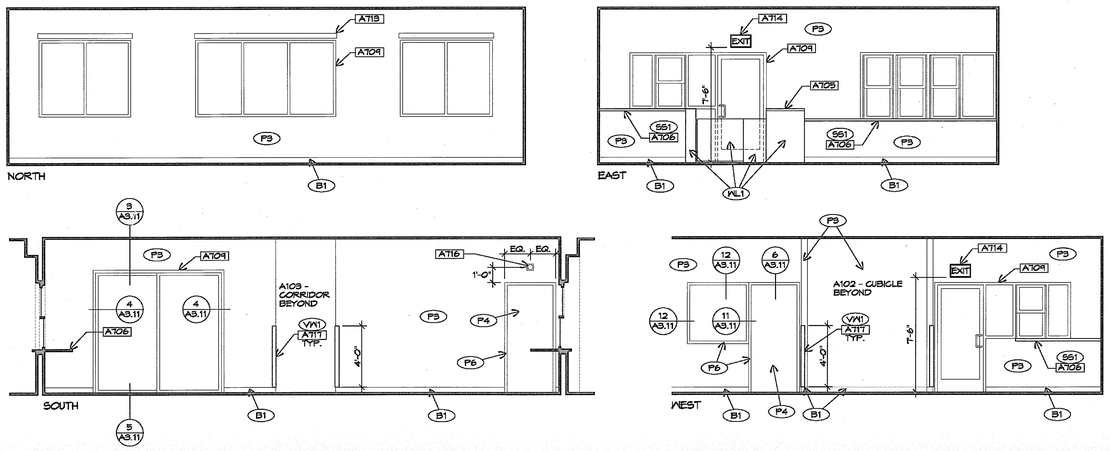

Open Office - A101 | SCALE: 1/4"=1'-0" | 4

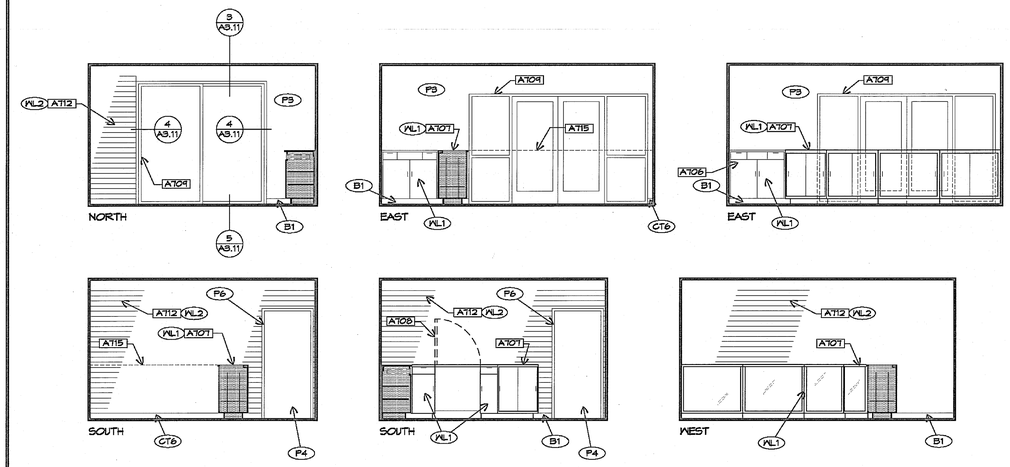

Retail - A104 | SCALE: 1/4"=1'-0" | 1

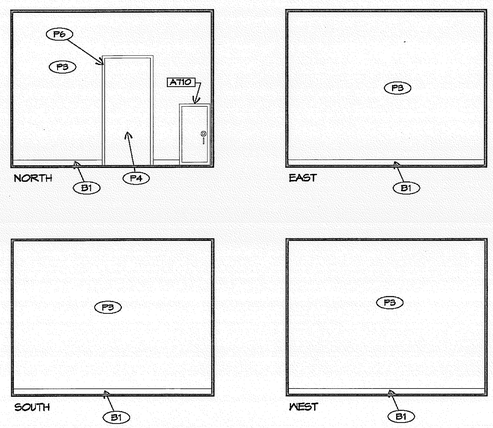

Office - A109 | SCALE: 1/4"=1'-0" | 7

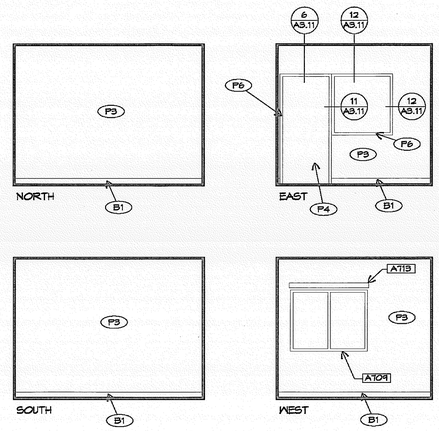

Office - A115 | SCALE: 1/4"=1'-0" | 5

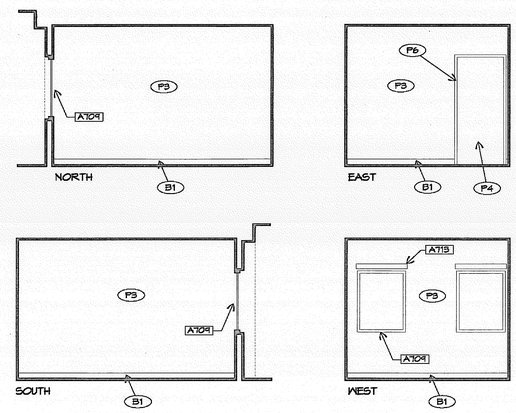

Conference Room - A113 | SCALE: 1/4"=1'-0" | 2

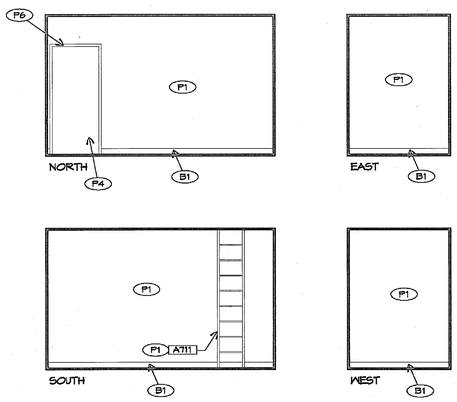

Storage - A105 | SCALE: 1/4"=1'-0" | 8

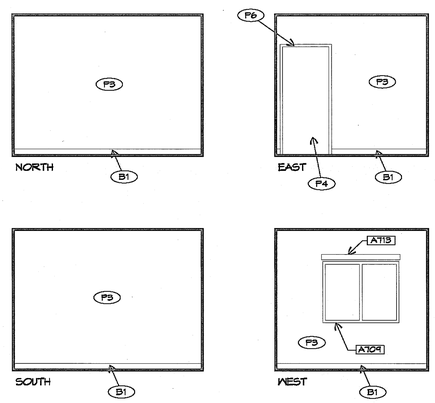

Office - A112 | SCALE: 1/4"=1'-0" | 6

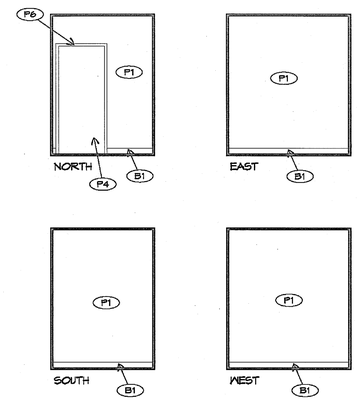

NOTES:
1. SEE A-3.7 FOR FINISH LEGEND AND INTERIOR KEY NOTES.

Electrical - A116 | SCALE: 1/4"=1'-0" | 3

MOORE IACOFANO GOLTSMAN, INC.
501 N. HARBOR BLVD.
FULLERTON, CA 92831
TEL 714/871-3633
FAX 714/871-1188
www.migcom.com

PITASSI ARCHITECTS ,INC.
8439 White Oak Ave., Suite. 105
Rancho Cucamonga, Ca 91730
Tel. 909-980-1361 ¤ Fax. 909-944-5814
e-mail. pjpaia@pitassiarchitects.com

CONSULTANT:

PERRIS VALLEY Big League Dreams

2155 Trumble Road
Perris, California 92570

SHEET TITLE

100% CONSTRUCTION DOCUMENT

DATE	REVISIONS

STAMP

CHECKED BY	DATE
-	-

DATE 01-07-10	FILE NAME
DRAWN BY -	SHEET A-3.8
JOB NO. 05208.00	
SCALE	OF SHEETS