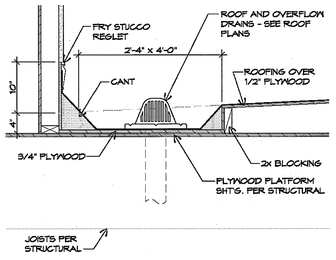

Roof Drain | SCALE: 1"=1'-0" | 12

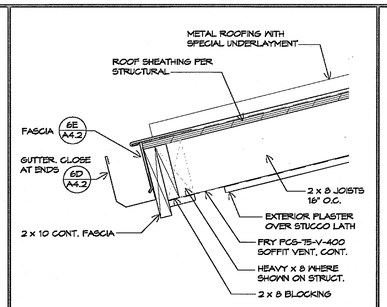

Typical Eave | SCALE: 1 1/2"=1'-0" | 7

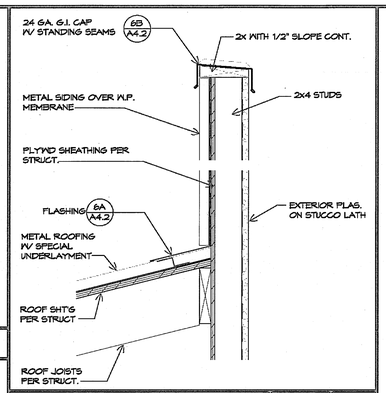

Parapet and Roof | SCALE: 1 1/2"=1'-0" | 2

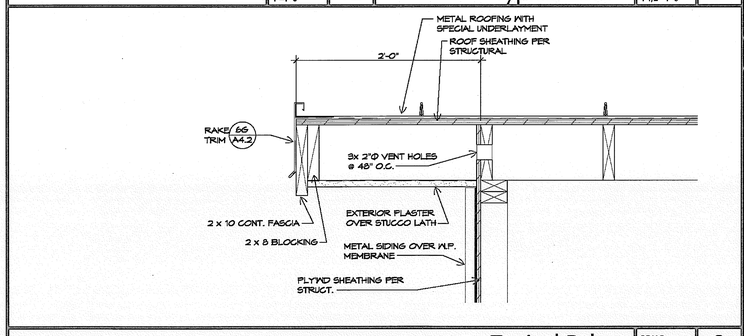

Typical Rake | SCALE: 1 1/2"=1'-0" | 8

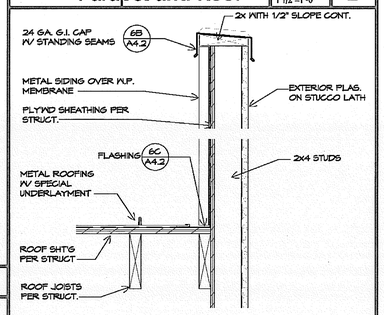

Parapet and Roof | SCALE: 1 1/2"=1'-0" | 3

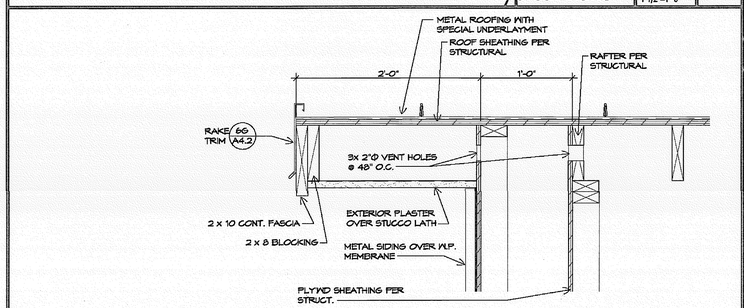

Typical Rake | SCALE: 1 1/2"=1'-0" | 9

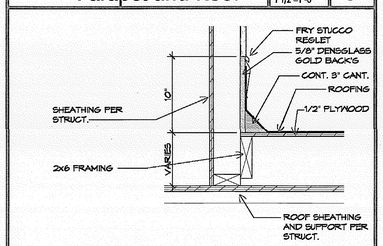

Base at Roof Well | SCALE: 1 1/2"=1'-0" | 4

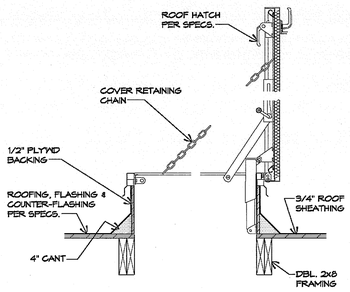

Roof Access Hatch | SCALE: 1"=1'-0" | 13

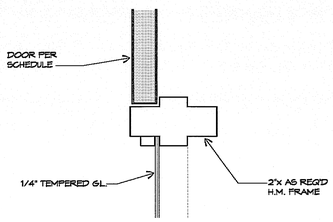

Door at Window | SCALE: 3"=1'-0" | 10

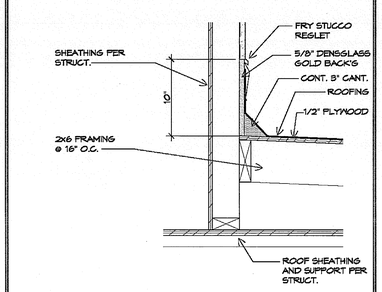

Base at Roof Well | SCALE: 1 1/2"=1'-0" | 5

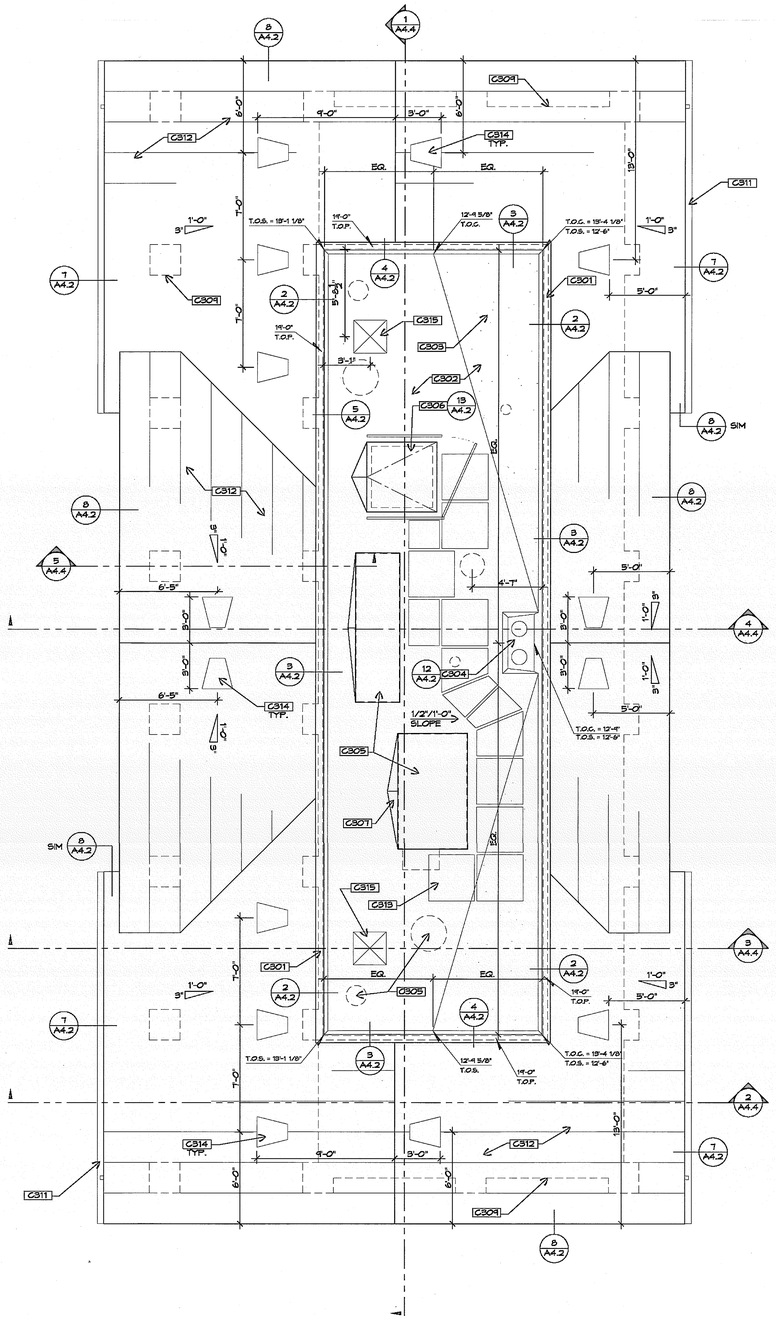

NOTES:

1. 0'-0" T.O.S. INDICATES ELEVATION ABOVE FINISH FLOOR.
   T.O.S. = TOP OF SHEATHING
   T.O.P. = TOP OF PARAPET
   T.O.C. = TOP OF CRICKET/ RIGID INSULATION
2. CLASS "A" BUILT-UP ROOFING, SEE SPECS. INSTALL PER MFGR'S WRITTEN INSTRUCTIONS.
3. PROVIDE BURGLAR BARS AT DUCTWORK THROUGH ROOF AT ANY DUCT LARGER THAN 12".
4. COORDINATE LOCATIONS OF EQUIPMENT PLATFORMS, ROOF ACCESS AND OTHER EQUIPMENT. KEEP EQUIP. CLEAR OF CRICKET FLOW LINES.
5. BUILD UP INDICATED ROOF CRICKETS USING LAYERED RIGID INSULATION.
6. SEE KEY NOTES, THIS SHEET.

Concessions - Roof Plan | SCALE: 1/4"=1'-0" | 1

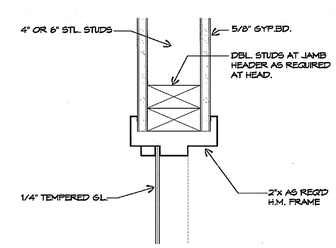

Wdw. Jamb - Head sim. | SCALE: 3"=1'-0" | 11

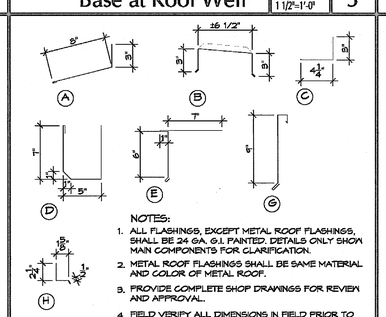

Flashings | SCALE: 1 1/2"=1'-0" | 6

C301	SHEET METAL COPING. SEE DETAILS.
C302	BUILT-UP ROOFING.
C303	CRICKET: 1/2" / 1'-0" SLOPE MIN.
C304	ROOF DRAIN & OVERFLOW DRAIN. SEE DETAILS.
C305	ROOF-MOUNTED EQUIPMENT. SEE MECHANICAL DRAWINGS.
C306	ROOF ACCESS HATCH W/ BIL-GUARD RAILING. SEE SPECS.
C307	CRICKET AT UPHILL SIDE OF ALL ROOF EQUIPMENT.
C308	NOT USED.
C309	LINE OF WALL BELOW.
C310	NOT USED.
C311	ROOF GUTTER AND DOWNSPOUTS. SEE EXT. ELEVATIONS.
C312	STANDING SEAM METAL ROOF. 17" WIDE SNAP SEAM HP PANELS IN "COOL FOREST GREEN." SEE SPECS.
C313	PROTECTIVE MATS. ARRANGE AS INDICATED TO PROVIDE WALKWAY FROM ROOF ACCESS TO EQUIPMENT.
C314	12" x 24" 26 GA. GALVANIZED STEEL HALF-ROUND DORMER VENT BY CONSTRUCTION METALS, INC. PAINT TO MATCH ROOF.
C315	18" x 18" 26 GA. GALVANIZED STEEL "ECONO VENT" BY CONSTRUCTION METALS, INC.

Roof Plan Key Notes

MIG
MOORE IACOFANO GOLTSMAN, INC.
601 N. HARBOR BLVD. FULLERTON, CA 92831
TEL 714/871-3533 FAX 714/871-1183
www.migcorp.com

PITASSI ARCHITECTS, INC.
8439 White Oak Ave., Suite. 105
Rancho Cucamonga, Ca 91730
Tel. 909-980-1361 ▪ Fax. 909-944-5814
e-mail. pjpaia@pitassiarchitects.com

CONSULTANT:

PERRIS VALLEY Big League Dreams

2155 Trumble Road
Perris, California 92570

SHEET TITLE

100% CONSTRUCTION DOCUMENT

DATE	REVISIONS

STAMP

REGISTERED PROFESSIONAL ENGINEER 611446 STATE OF CALIFORNIA

CHECKED BY	DATE
-	-
DATE 01-07-10	FILE NAME
DRAWN BY -	SHEET A-4.2
JOB NO. 05208.00	
SCALE	OF SHEETS