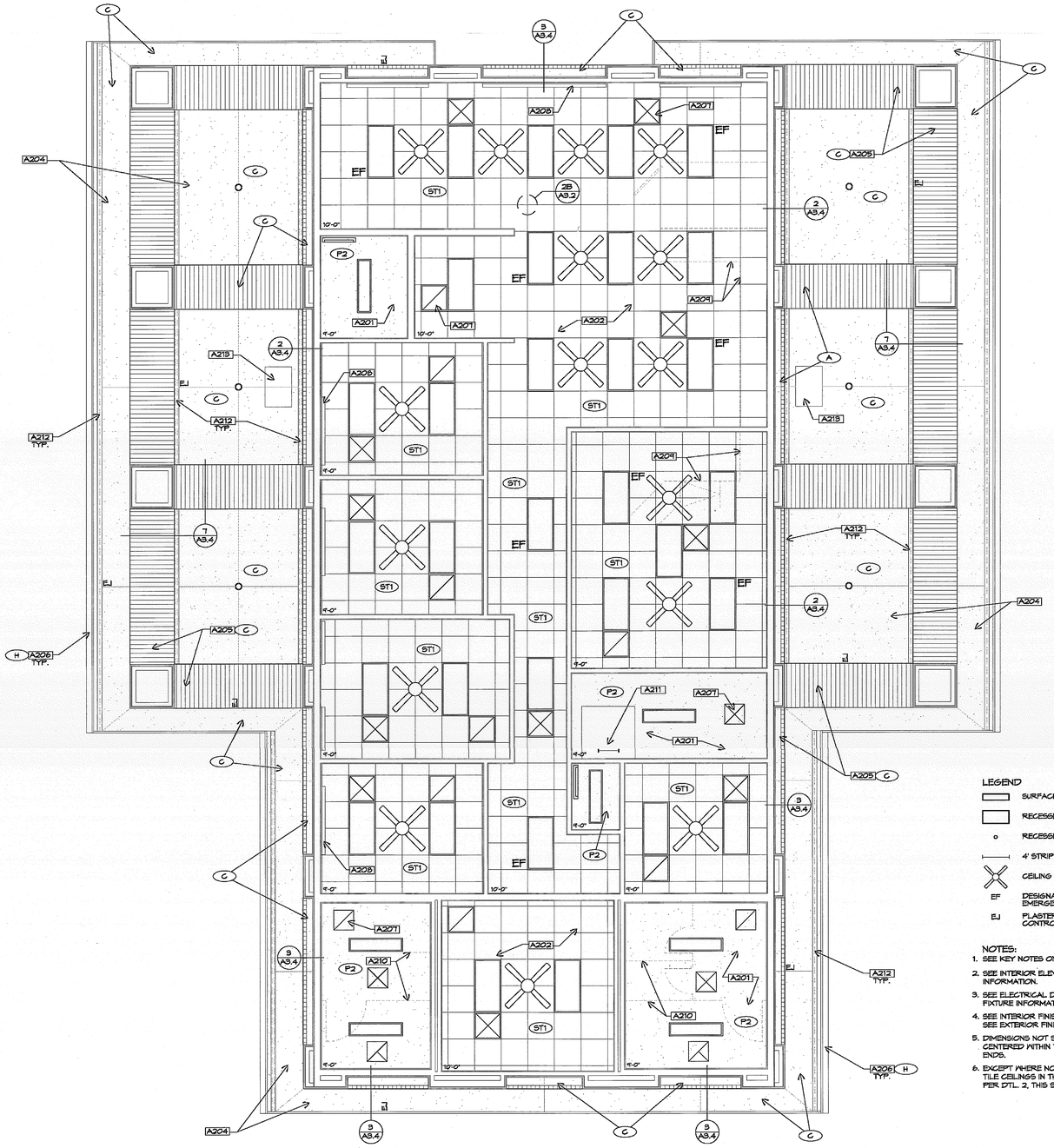

Administration Building - Reflected Ceiling Plan

SCALE: 1/4"=1'-0" | 1

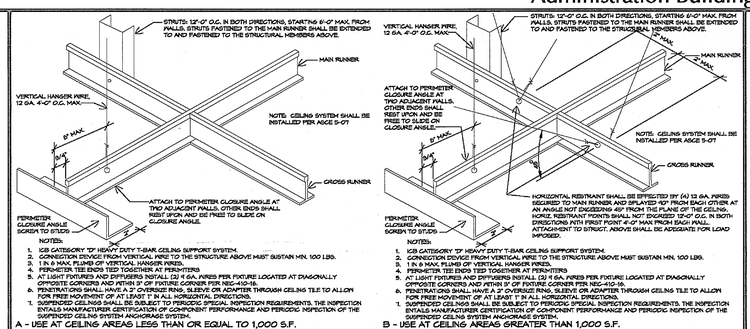

NOTES:
1. ICB CATEGORY 'D' HEAVY DUTY T-BAR CEILING SUPPORT SYSTEM.
2. CONNECTION DEVICE FROM VERTICAL WIRE TO THE STRUCTURE ABOVE MUST SUSTAIN MIN. 100 LBS.
3. 1 IN 8 MAX. PLUMB OF VERTICAL HANGER WIRES.
4. PERIMETER TEE ENDS TIED TOGETHER AT PERIMETERS
5. AT LIGHT FIXTURES AND DIFFUSERS INSTALL (2) 12 GA. WIRES PER FIXTURE LOCATED AT DIAGONALLY OPPOSITE CORNERS AND WITHIN 9" OF FIXTURE CORNER PER MEC-410-16.
6. PENETRATIONS SHALL HAVE A 2" OVERSIZED END. SLEEVE OR ADAPTER THROUGH CEILING TILE TO ALLOW FOR FREE MOVEMENT OF AT LEAST 1" BUILT HORIZONTAL DIRECTIONS.
7. SUSPENDED CEILINGS SHALL BE SUBJECT TO PERIODIC SPECIAL INSPECTION REQUIREMENTS. THE INSPECTION ENTAILS MANUFACTURER CERTIFICATION OF COMPONENT PERFORMANCE AND PERIODIC INSPECTION OF THE SUSPENDED CEILING SYSTEM ANCHORAGE SYSTEM.

A - USE AT CEILING AREAS LESS THAN OR EQUAL TO 1,000 S.F.

NOTES:
1. ICB CATEGORY 'D' HEAVY DUTY T-BAR CEILING SUPPORT SYSTEM.
2. CONNECTION DEVICE FROM VERTICAL WIRE TO THE STRUCTURE ABOVE MUST SUSTAIN MIN. 100 LBS.
3. 1 IN 8 MAX. PLUMB OF VERTICAL HANGER WIRES.
4. PERIMETER TEE ENDS TIED TOGETHER AT PERIMETERS
5. AT LIGHT FIXTURES AND DIFFUSERS INSTALL (2) 12 GA. WIRES PER FIXTURE LOCATED AT DIAGONALLY OPPOSITE CORNERS AND WITHIN 9" OF FIXTURE CORNER PER MEC-410-16.
6. PENETRATIONS SHALL HAVE A 2" OVERSIZED END. SLEEVE OR ADAPTER THROUGH CEILING TILE TO ALLOW FOR FREE MOVEMENT OF AT LEAST 1" BUILT HORIZONTAL DIRECTIONS.
7. SUSPENDED CEILINGS SHALL BE SUBJECT TO PERIODIC SPECIAL INSPECTION REQUIREMENTS. THE INSPECTION ENTAILS MANUFACTURER CERTIFICATION OF COMPONENT PERFORMANCE AND PERIODIC INSPECTION OF THE SUSPENDED CEILING SYSTEM ANCHORAGE SYSTEM.

B - USE AT CEILING AREAS GREATER THAN 1,000 S.F.

S.A.T. Bracing

SCALE: NTS | 2

A201	GYP. BOARD CEILING PER SECTIONS & DETAILS. NOTED CLG. HEIGHT IS TO UNDERSIDE OF FRAMING OR SUSPENSION.
A202	SUSPENDED ACOUSTIC TILE CEILING W/ 2'x2' T-BAR GRID. BRACING PER "S.A.T. BRACING" DETAIL, 2/A-3.2
A203	NOT USED.
A204	EXTERIOR PLASTER AT UNDERSIDE OF ROOF OVERHANG OR SOFFIT.
A205	UNDERSIDE OF ARCHED SOFFIT PER SECTIONS & DTLS.
A206	UNDERSIDE OF ROOF GUTTER. SEE ROOF PLAN & EXTERIOR ELEVATIONS FOR DOWNSPOUT LOCATIONS.
A207	HVAC REGISTER. TYPE & SIZE PER MECHANICAL. LOCATE AS SHOWN ON THIS PLAN.
A208	SUNSHADE. SEE SPECIFICATIONS.
A209	LINE OF CABINETRY AND/ OR COUNTERTOP BELOW.
A210	LINE OF TOILET PARTITION BELOW.
A211	LADDER & ROOF HATCH. SEE SPECIFICATIONS.
A212	FRY FCS-TS-V-400 SOFFIT VENT, CONTINUOUS WHERE SHOWN.
A213	25"X33" 14 GA. CEILING ACCESS PANEL IN 16 GA. FRAME W/ CONTINUOUS PIANO HINGE AND CYLINDER LOCK W/ DUST SHUTTER. FACTORY PRIME AND FIELD PAINT TO MATCH ADJACENT SURFACE. MAINTAIN MIN. 30" CLEAR HT. ABOVE PANEL.

Clg. Plan Key Notes

MIG
MOORE IACOFANO GOLTSMAN, INC.
201 N. HARBOR BLVD.
FULLERTON, CA 92831
TEL 714/871-3533
FAX 714/871-1169
www.migcom.com

PITASSI ARCHITECTS, INC.
8439 White Oak Ave., Suite. 105
Rancho Cucamonga, Ca 91730
Tel. 909-980-1361 ▪ Fax. 909-944-5814
e-mail. pjpaia@pitassiarchitects.com

CONSULTANT:

PERRIS VALLEY Big League Dreams

2155 Trumble Road
Perris, California 92570

SHEET TITLE

100% CONSTRUCTION DOCUMENT

DATE	REVISIONS

STAMP

REGISTERED PROFESSIONAL ENGINEER
C. 31446
STATE OF CALIFORNIA

CHECKED BY	DATE
-	-

DATE	FILE NAME
01-07-10	
DRAWN BY	SHEET
-	A-3.2
JOB NO. 05208.00	
SCALE	OF SHEETS