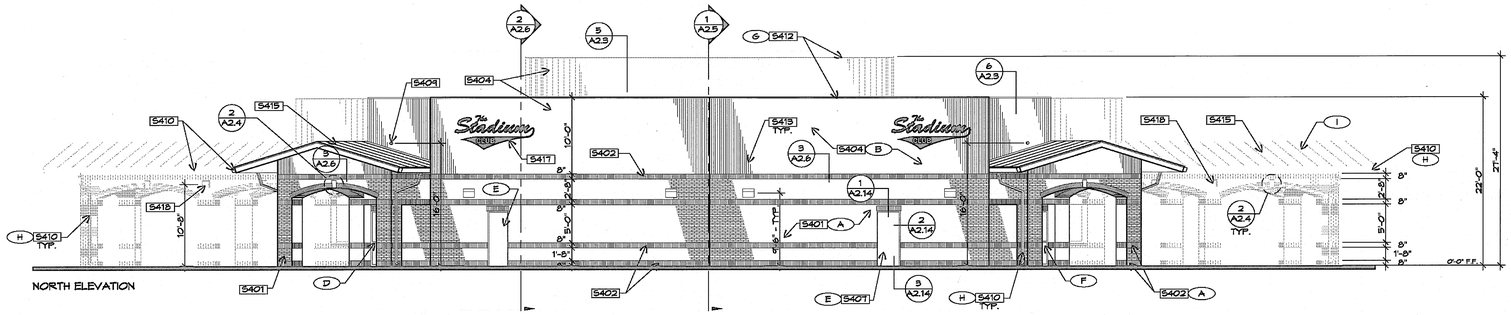

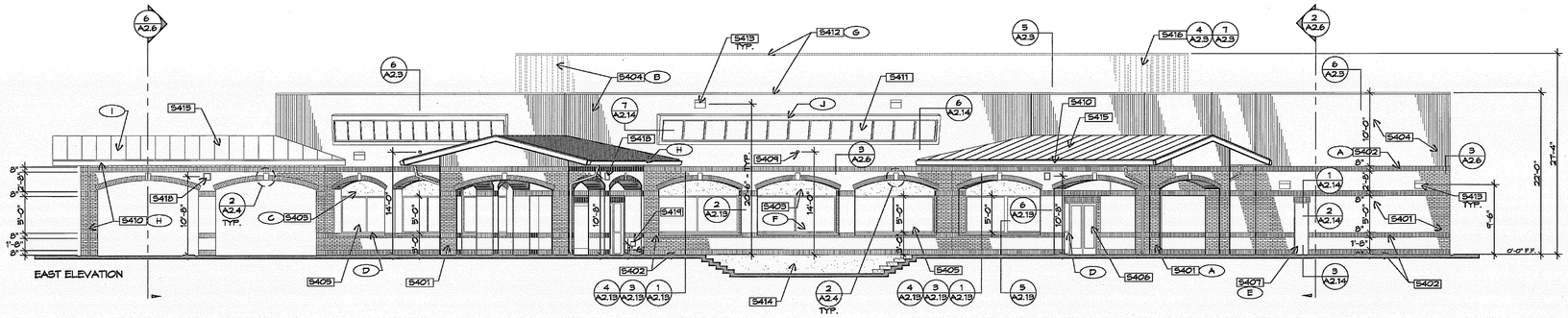

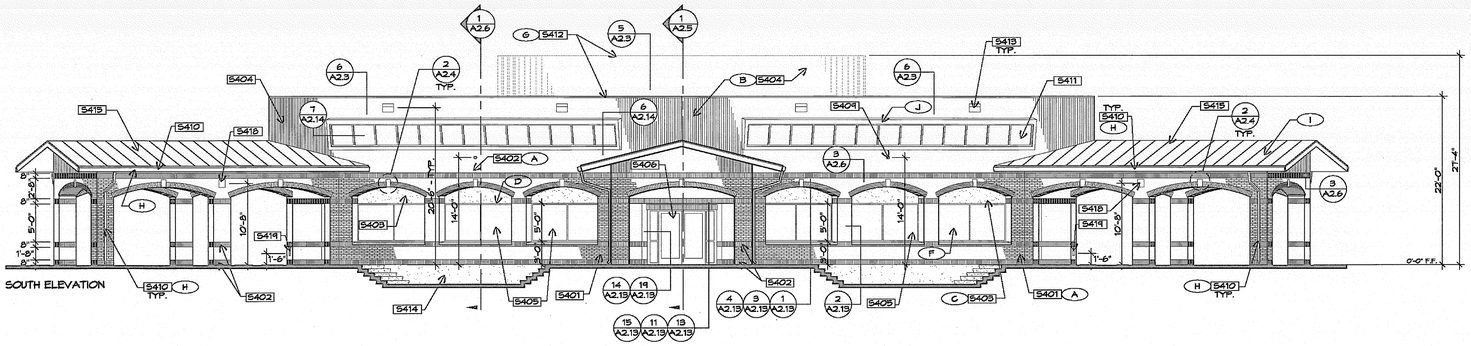

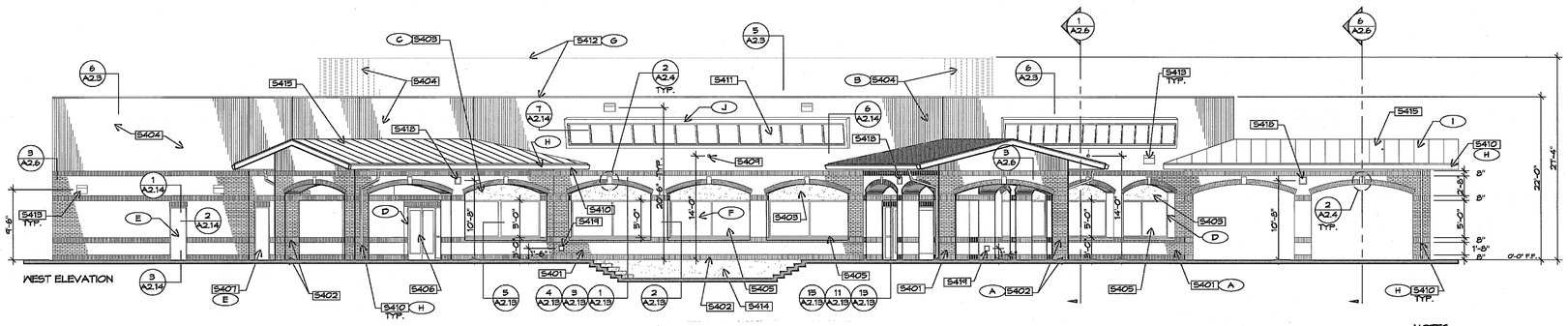

NOTES:
1. SEE KEY NOTES, THIS SHEET.

A	THIN BRICK VENEER -	H.C. MUDDOX INTERSTATE BRICK THIN BRICK SERIES - "OLD TOWN RED - SMOOTH"
B	BOX-RIB METAL PANEL	AEP SPAN DURATECH 5000/ZINCALUME "COOL WEATHERED COPPER"
C	EXTERIOR PLASTER	LA HABRA STUCCO X-55 "FRENCH VANILLA"
D	CURTAIN WALL & STOREFRONT	ARCADIA AG451 SERIES W/ 1" GLAZING AB-5 "STANDARD MEDIUM BRONZE"
E	H.M. DOORS AND FRAMES -	DUNN-EDWARDS PAINTS "BLACK SPRUCE" DE6308
F	GLAZING -	PPG SOLARBAN 70XL "SOLARBRONZE"
G	COPINGS AND FLASHING -	PAINT TO MATCH ADJACENT MATERIAL
H	GUTTERS AND DOWNSPOUT	DUNN-EDWARDS PAINTS "BLACK SPRUCE" DE6308
I	STANDING SEAM METAL ROOF	AEP SPAN 22 GA., 17" WIDE SNAP SEAM HP PANELS DURATECH 5000/ZINCALUME "COOL FOREST GREEN"
J	SHEET METAL -	DUNN-EDWARDS PAINTS "WEATHERED BROWN" DEC756
NF	NO FINISH	

NOTES:
1. METAL TRIMS AND FLASHINGS FOR BOX RIB PANELS TO MATCH PANEL COLOR AND FINISH.

Exterior Finish/ Color Legend

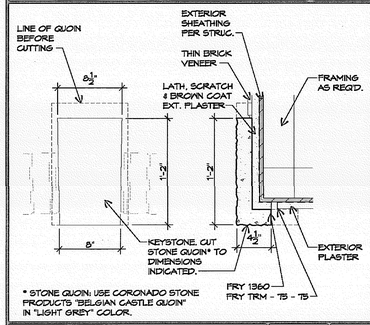

* STONE QUOIN: USE CORONADO STONE PRODUCTS "BELGIAN CASTLE QUOIN" IN "LIGHT GREY" COLOR.

Arch Keystone | SCALE: 1 1/2"=1'-0" | 2

5401	BRICK VENEER. SEE DETAILS & SPECS.
5402	BRICK VENEER "SOLDIER COURSE". SEE DETAILS & SPECS.
5403	EXTERIOR PLASTER. SEE DETAILS & SPECS.
5404	"BOX RIB" METAL SIDING PANELS.
5405	ALUM. & GLASS CURTAIN WALL OR STOREFRONT WINDOW SYSTEM.
5406	ALUM. & GLASS DOOR. SEE SCHEDULE.
5407	H.M. DOOR & FRAME. SEE DETAILS & SCHEDULE.
5408	NOT USED.
5409	ROOF OVERFLOW DRAIN SPOUT. SEE PLUMBING & SPECS.
5410	ROOF GUTTER & DOWNSPOUT. SEE SPECIFICATIONS.
5411	"ANNOUNCER BOOTH" FEATURE. SEE DETAILS.
5412	METAL COPING @ ROOF PARAPET. SEE DETAILS.
5413	LIGHTING FIXTURE. MOUNT AT INDICATED HEIGHT. SEE ELECTRICAL FOR ADD'L. INFORMATION.
5414	CONCRETE RETAINING WALL. SEE SECTIONS & STRUCTURAL.
5415	STANDING SEAM METAL ROOF.
5416	HINGED GATE IN MECHANICAL SCREEN WALL.
5417	INTERNALLY ILLUMINATED EXIT SIGN. OWNER PROVIDED, CONTRACTOR INSTALLED.
5418	P/A SPEAKERS. MOUNT AS SHOWN, SEE ELECTRICAL FOR ADD'L. INFO.
5419	HOSE BIBB. LOCATE AT INDICATED HEIGHT. SEE PLUMBING FOR ADD'L. INFORMATION.

MIG
MOORE IACOFANO GOLTSMAN, INC.
201 N. HARBOR BLVD. FULLERTON, CA 92831
TEL 714/871-3533 FAX 714/871-1183
www.migcom.com

PITASSI ARCHITECTS, INC.
8439 White Oak Ave., Suite. 105
Rancho Cucamonga, Ca 91730
Tel. 909-980-1361 ▪ Fax. 909-944-5814
e-mail. pjpaia@pitassiarchitects.com

CONSULTANT:

PERRIS VALLEY Big League Dreams

2155 Trumble Road
Perris, California 92570

SHEET TITLE

100% CONSTRUCTION DOCUMENT

DATE	REVISIONS

STAMP

CHECKED BY: -
DATE: -
DATE: 01-07-10
FILE NAME:
DRAWN BY: -
SHEET: A-2.4
JOB NO. 05208.00
SCALE
OF SHEETS

Stadium Club - Exterior Elevations | SCALE: 1/8"=1'-0" | 1

Elevation Key Notes