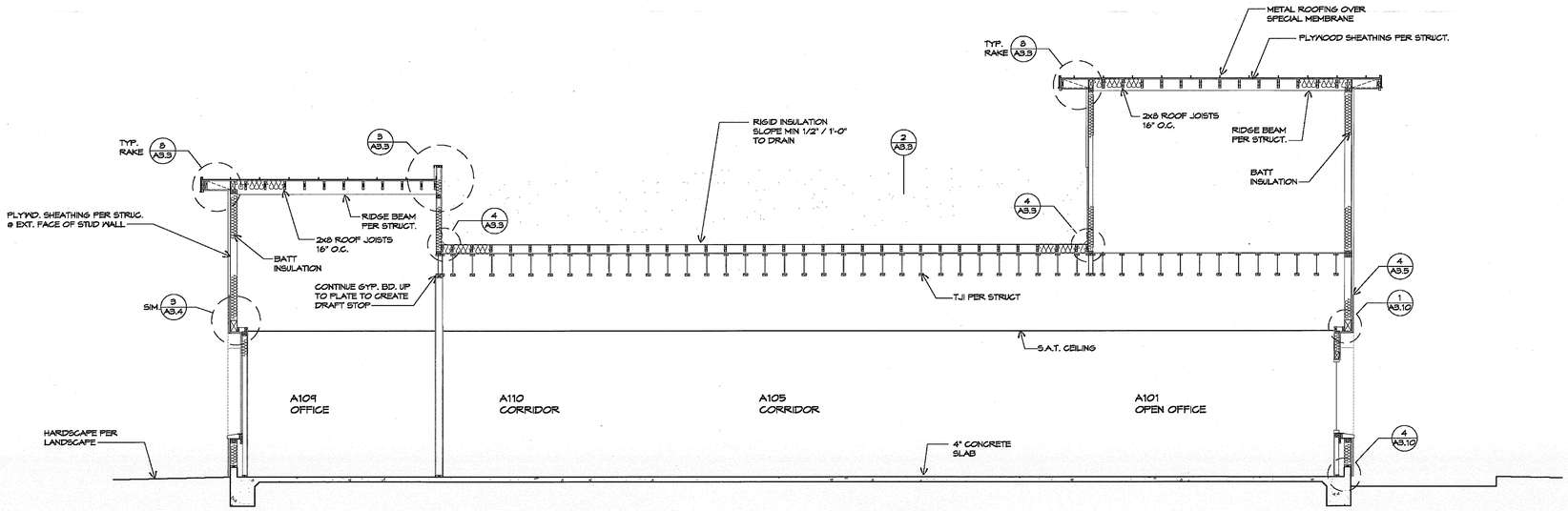

NOTE:
1. SEE NOTES AT DET. 1/A3.5

Administration Building - Building Section | SCALE: 1/4"=1'-0" | 1

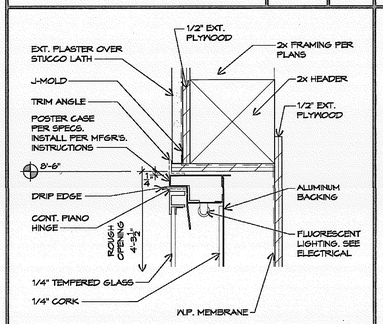

Poster Case Head | SCALE: 3"=1'-0" | 12

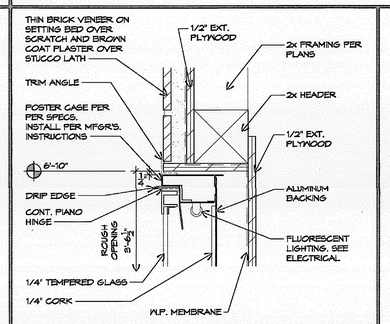

Poster Case Head | SCALE: 3"=1'-0" | 7

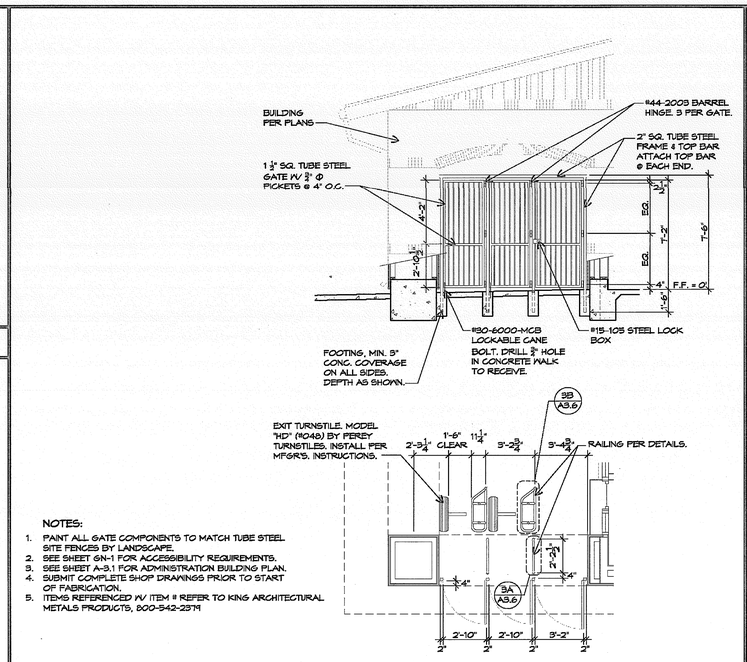

NOTES:
1. PAINT ALL GATE COMPONENTS TO MATCH TUBE STEEL SITE FENCES BY LANDSCAPE.
2. SEE SHEET GN-1 FOR ACCESSIBILITY REQUIREMENTS.
3. SEE SHEET A-3.1 FOR ADMINISTRATION BUILDING PLAN.
4. SUBMIT COMPLETE SHOP DRAWINGS PRIOR TO START OF FABRICATION.
5. ITEMS REFERENCED W/ ITEM # REFER TO KING ARCHITECTURAL METALS PRODUCTS, 800-542-2374

Entry Gates | SCALE: 1/4"=1'-0" | 4

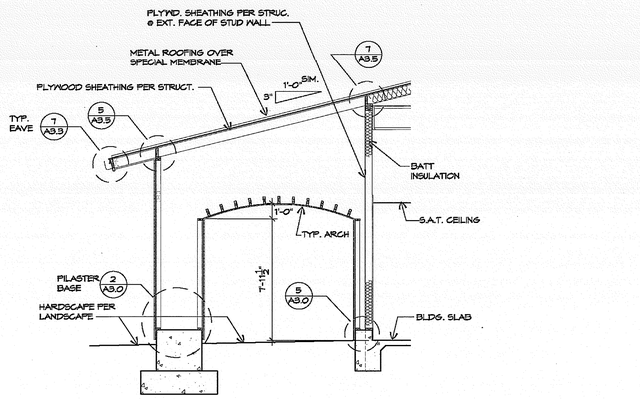

NOTE:
1. SEE NOTES AT DET. 1/A3.5

Administration Building - Wall Section | SCALE: 1/4"=1'-0" | 2

Poster Case Jamb | SCALE: 3"=1'-0" | 13

Poster Case Jamb | SCALE: 3"=1'-0" | 8

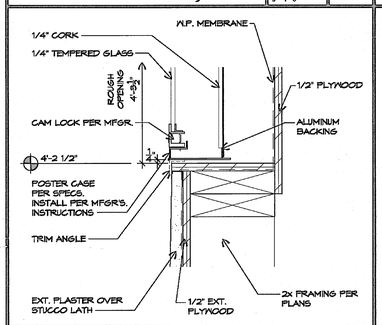

Poster Case Sill | SCALE: 3"=1'-0" | 14

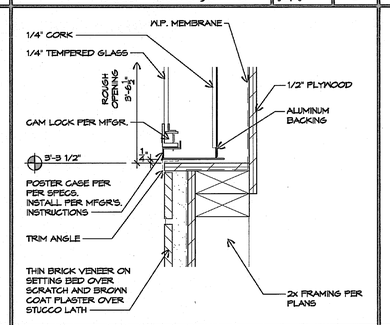

Poster Case Sill | SCALE: 3"=1'-0" | 9

Xxxx | SCALE: - | 6

Xxxx | SCALE: - | 5

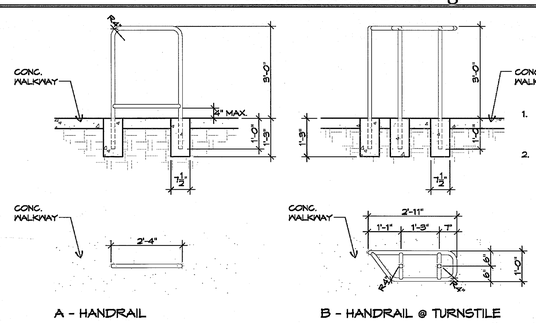

NOTES:
1. RAILINGS SHALL BE 1 1/2" Ø STAINLESS STEEL PIPE. SHOP FABRICATE W/ CLEAN, CONTINUOUS WELDS @ ALL JOINTS, FREE OF BURR OR DEFECT.
2. SET POSTS IN FOOTINGS W/ MIN. 3" CONC. COVERAGE ALL AROUND.

Entry Railings | SCALE: 1/2"=1'-0" | 3

Xxxx | SCALE: - | 10

Xxxx | SCALE: - | 11

MOORE IACOFANO GOLTSMAN, INC.
601 N. HARBOR BLVD.
FULLERTON, CA 92831
TEL 714/871-3533
FAX 714/871-1153
www.migcom.com

PITASSI ARCHITECTS, INC.
8439 White Oak Ave., Suite. 105
Rancho Cucamonga, Ca 91730
Tel. 909-980-1361 ▪ Fax. 909-944-5814
e-mail. pjpaia@pitassiarchitects.com

CONSULTANT:

PERRIS VALLEY Big League Dreams

2155 Trumble Road
Perris, California 92570

SHEET TITLE

100% CONSTRUCTION DOCUMENT

DATE	REVISIONS

STAMP

REGISTERED PROFESSIONAL ENGINEER 31446 STATE OF CALIFORNIA

CHECKED BY	DATE
-	-

DATE	FILE NAME
01-07-10	
DRAWN BY	SHEET
-	A-3.6
JOB NO. 05208.00	
SCALE	OF SHEETS