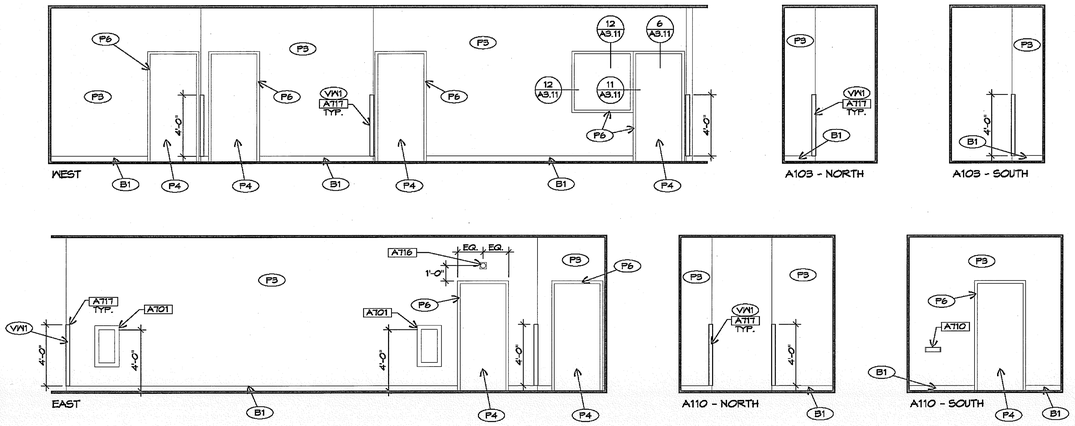

Corridor - A110 & A103 | SCALE: 1/4"=1'-0" | 4

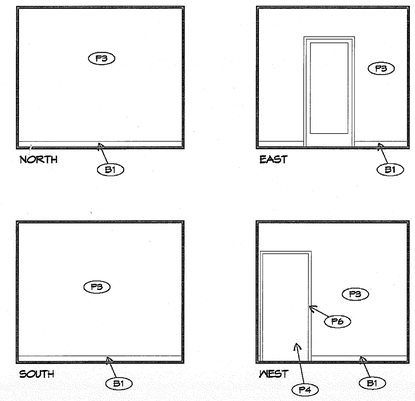

Office - A107 | SCALE: 1/4"=1'-0" | 1

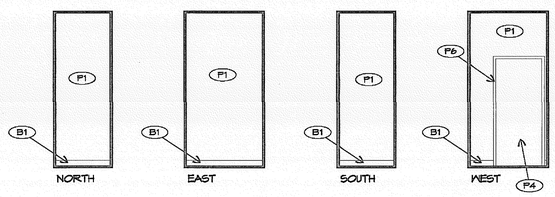

Server - A106 | SCALE: 1/4"=1'-0" | 5

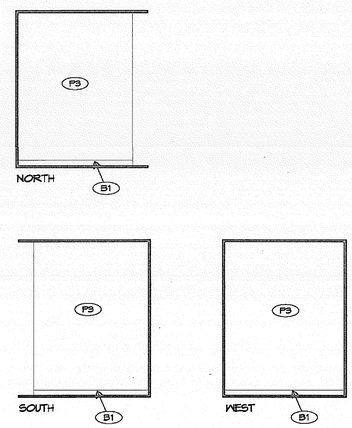

Cubicle - A102 | SCALE: 1/4"=1'-0" | 2

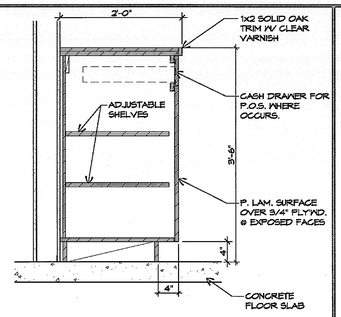

Cabinet | SCALE: 1"=1'-0" | 8

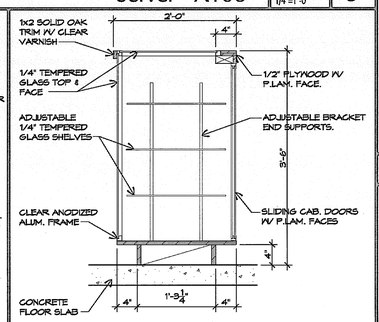

Display Cabinet | SCALE: 1"=1'-0" | 6

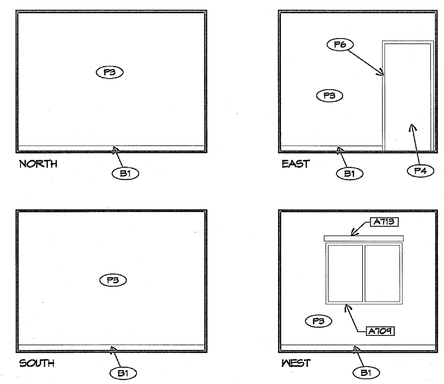

NOTES:
1. SEE A-9.1 FOR FINISH LEGEND AND INTERIOR KEY NOTES.

Office - A114 | SCALE: 1/4"=1'-0" | 3

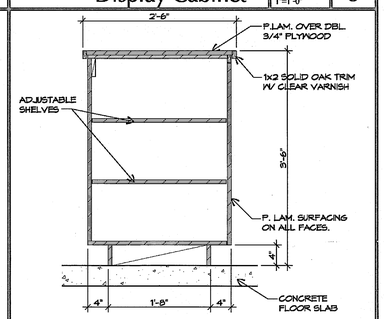

Cabinet | SCALE: 1"=1'-0" | 7

MOORE IACOFANO GOLTSMAN, INC.
601 N. HARBOR BLVD.
FULLERTON, CA 92831
TEL 714/871-3538
FAX 714/871-1183
www.migcom.com

PITASSI ARCHITECTS, INC.
8439 White Oak Ave., Suite. 105
Rancho Cucamonga, Ca 91730
Tel. 909-980-1361 ▪ Fax. 909-944-5814
e-mail. pjpaia@pitassiarchitects.com

CONSULTANT:

PERRIS VALLEY Big League Dreams

2155 Trumble Road
Perris, California 92570

SHEET TITLE

100% CONSTRUCTION DOCUMENT

DATE	REVISIONS

STAMP

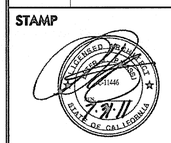

CHECKED BY	DATE
-	-

DATE	FILE NAME
01-07-10	
DRAWN BY -	SHEET A-3.9
JOB NO. 05208.00	
SCALE	OF SHEETS